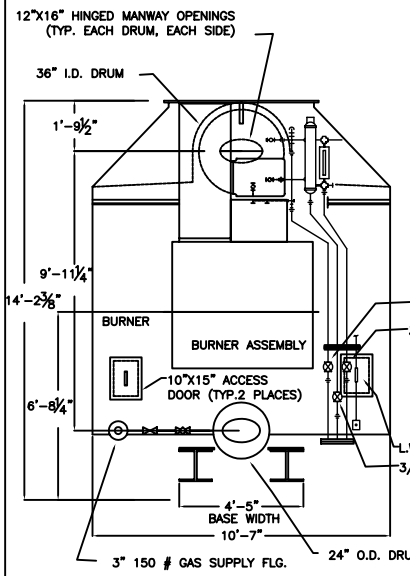

BURNER END VIEW

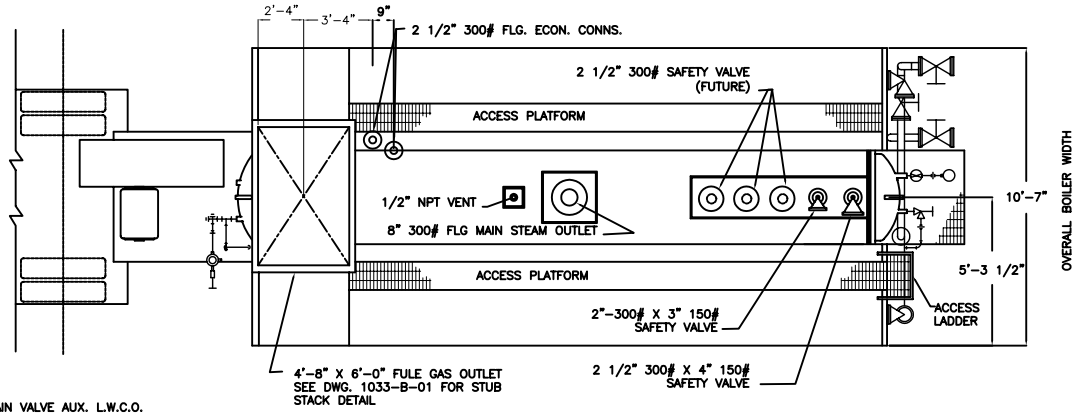

PLAN VIEW

DESIGN DATA

CONTINUOUS CAPACITY	75,000 LBS/HR.
DESIGN PRESSURE	350 PSIG
OPERATING PRESSURE	100–335 PSIG
FEEDWATER TEMERATURE	212° F
FURNACE VOLUME	1043 FT.3
CONVECTION HEATING SURFACE	5079 FT.2
RADIANT HEATING SURFACE	608 FT.2 (ASME)
TOTAL HEATING SURFACE	5688 FT.2 (ASME)

FULE REQUIREMENTS:

NATURAL GAS–	10 PSIG (MAX. REG.)
SUPPLY PRESSURE	102,570 SCFM
CONSUMPTION	680 GPH
NO.2 FUEL OIL	647 GPH
NO.6 FUEL OIL	250 CFM @100 PSIG
AIR ATOMIZING	800 LB/HR @100 PSIG
STEAM ATOMIZING	

POWER REQUIREMENTS

230–460 VOLT AC 3 PHASE 60 HZ 75KW (FD FAN 75 HP, FUEL PUMP 3HP)

SHIPPING WEIGHT

BOILER & TRAILER 90,000 LBS.

OPERATING WEIGHT

BOILER TRAILER 108,900 LBS.

INSTALLATION:

OUTDOOR SERVICE

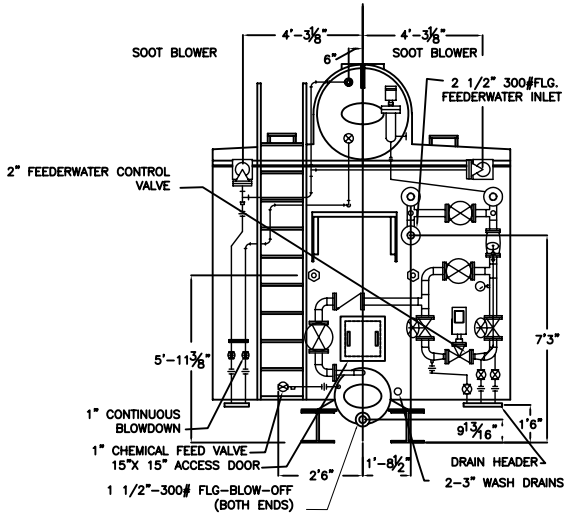

TARGET END VIEW

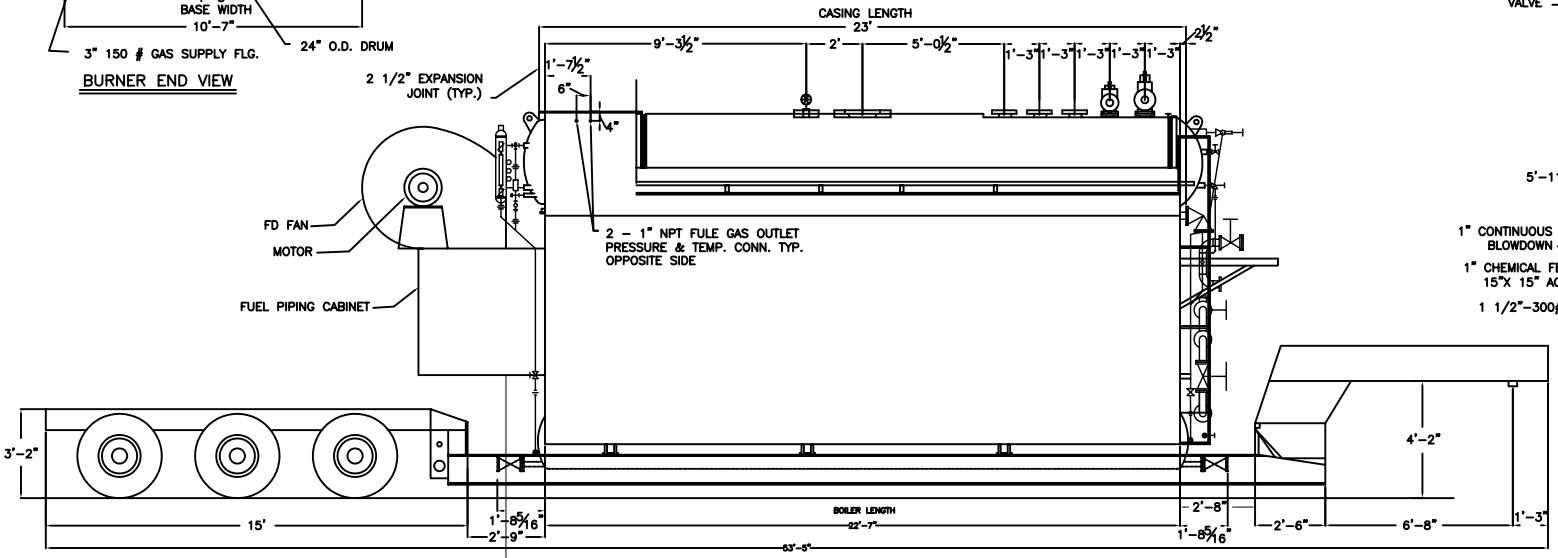

SIDE VIEW

Designed by	Checked by	Approved by - date	Filename 00000000	Date 05/2002	Scale N/A

WARE
POWERFUL SOLUTIONS . EXTRAORDINARY RESULTS.

75,000 LBS./ HR.
TRAILER MOUNTED BOILER

1033–D–02 | Edition | Sheet